GSLIDE

4300-00

PRECISION BALL BEARING DRAWER SLIDE

Mounting	Side
Side Clearance	12.7mm +0.8/0
Height	43mm
Material	Steel
Load Rating	40kg at 22" (550mm)
Size	10" to 28" (250mm to 700mm)
Travel	Full Extension
Disconnect	Lever (Non-handed design)
Finish	Electro-Zinc plated with clear, yellow or black chromate

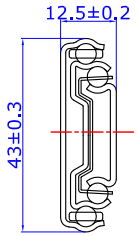

Profile

All Dimensions are in Millimeters (mm)

Slide Dimensions

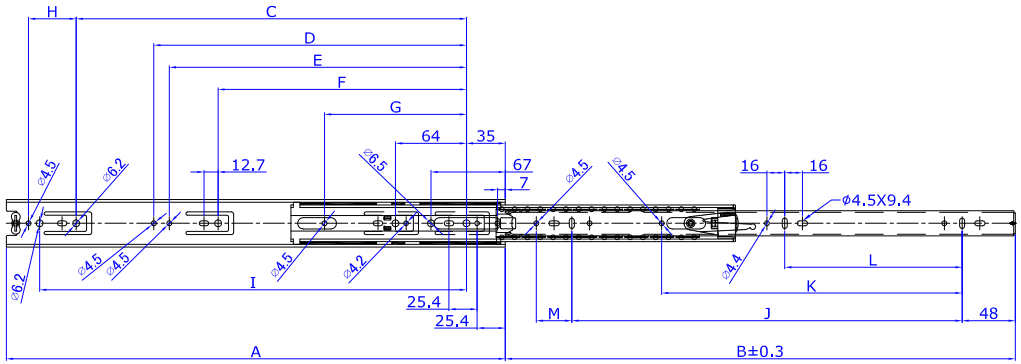

mm

SIZE	A	B	Load Rating/Kg	C	D	E	F	G	H	I	J	K	L	M
10" (250)	250	250	25			195	160				160			
12" (300)	300	300	33		244	224	192	128			192			32
14" (350)	350	350	33		296	282	224	128			256		96	
16" (400)	400	400	38	320	282		224	128	25		288		128	32
18" (450)	450	450	38	352	282		224	128	43		352	271	160	
20" (500)	500	500	38	416	282		224	128	29		416	297	192	
22" (550)	550	550	40	448	352	282	224	128	47	480	448	323	224	
24" (600)	600	600	35	480	352	282	224		64		512		224	
26" (650)	650	650	30	544	352	282	224		51		544		256	
28" (700)	700	705	30	576	352	282	224		69		608		256	

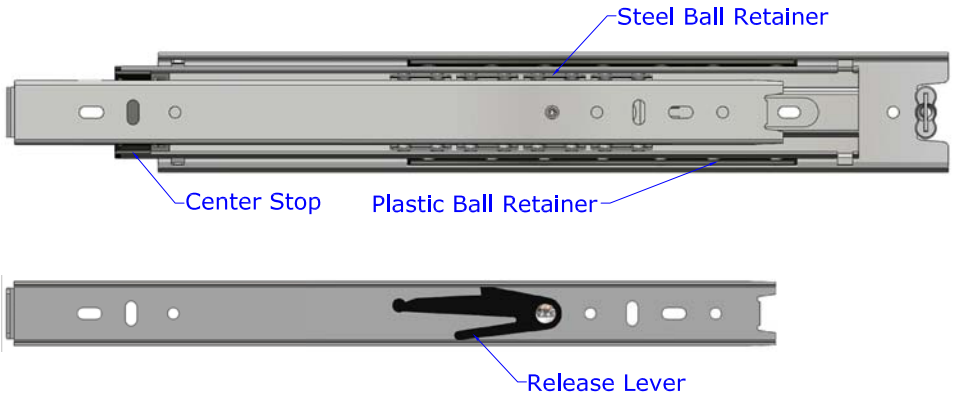

Drawer Slide Mounting Profile

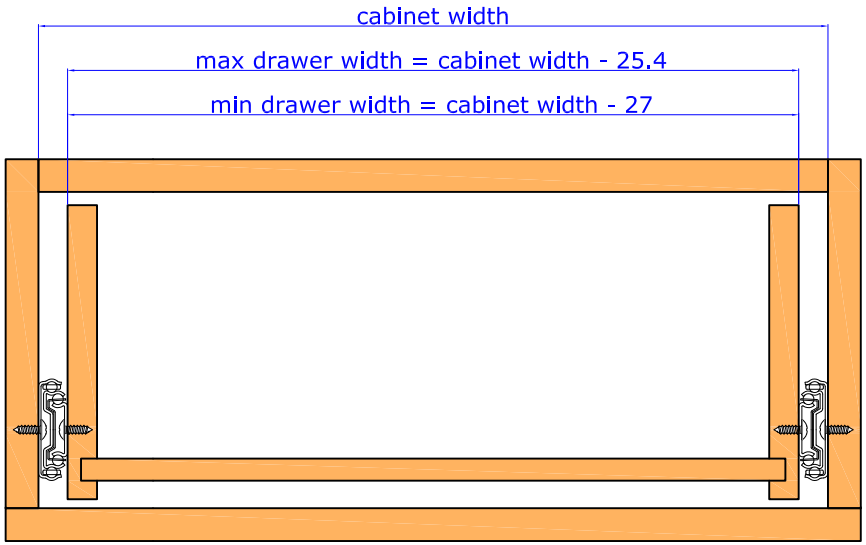

APPLICATIONS:
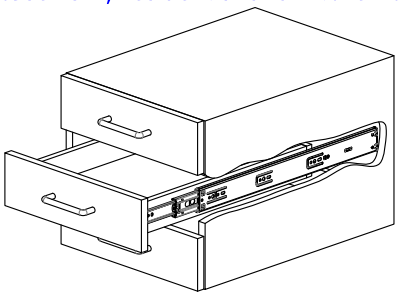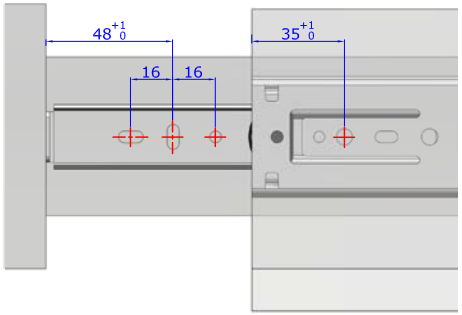
For use in wood pedestals, dresser, desk, casework, residential and kitchen cabinetry.